M&M
NETWORKING GLOBAL MARKETERS

www.mandmglobal.com

M&M Creative 2010-2011

Mechanical Specifications

2. Quarterly: Available standard formats and sizes
4. Media guide, Supplements and Wall charts
5. Creative delivery specifications
6. Digital specifications

M&M
NETWORKING GLOBAL MARKETERS

www.mandmglobal.com

Mechanical Specifications (print)

Quarterly: available standards formats and sizes

DPS* (include 3mm bleed)

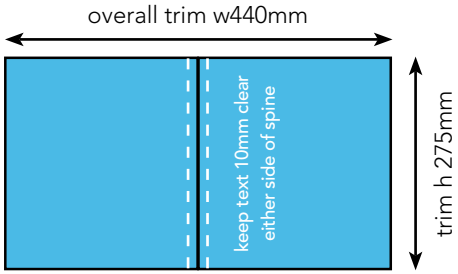

Single (include 3mm bleed)

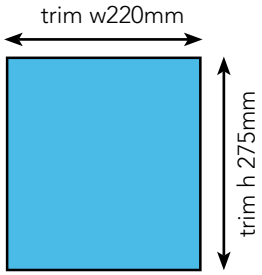

Cover Wrap* (include 3mm bleed)

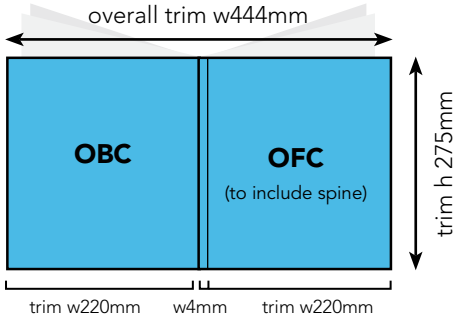

IBC, IFC, OBC
(include 3mm bleed)

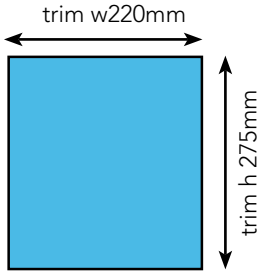

DPS*/Single
trim: w 220mm x h 275mm
text safe area: w200mm x h 255mm
bleed: 226mm x h 281mm

***** Double page spreads to be supplied as 2 single page pdfs

Please note
In all cases of DPS please keep text 10mm clear either side of spine

1 Column

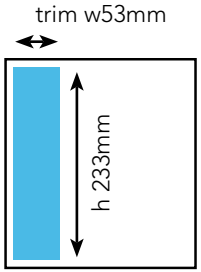

2 Column

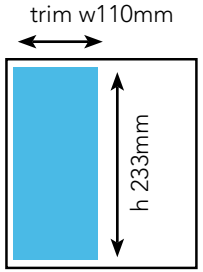

FP + 1 Column*

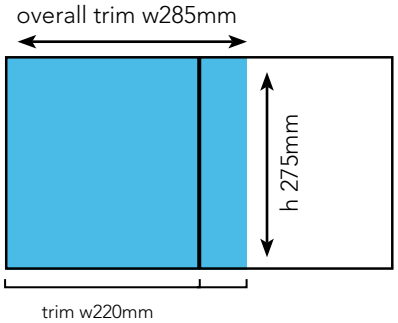

Bottom Banner 1/3 Page DPS*

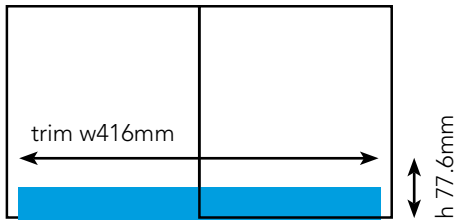

1/2 page horizontal DPS*

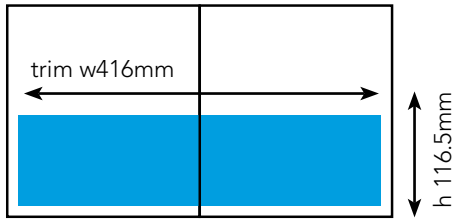

1/2 page horizontal

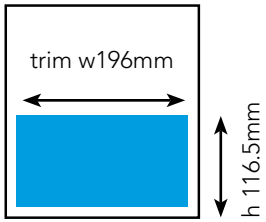

Quarterly: available standard formats and sizes

L/H Gate Fold FP*
(include 3mm bleed)

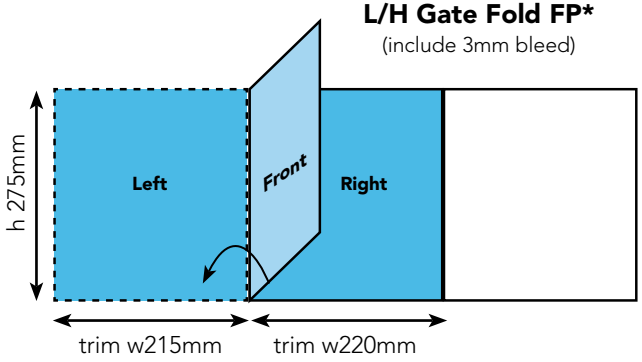

R/H Gate Fold FP*
(include 3mm bleed)

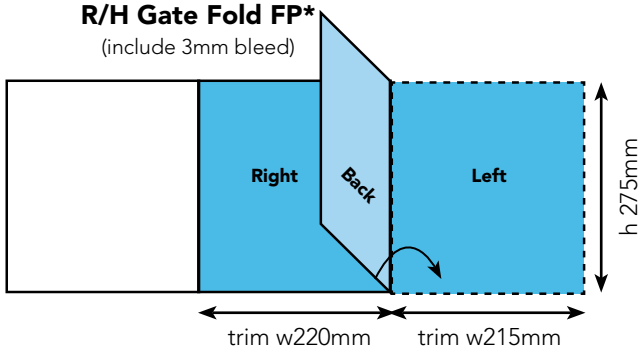

Fireplace Spread**

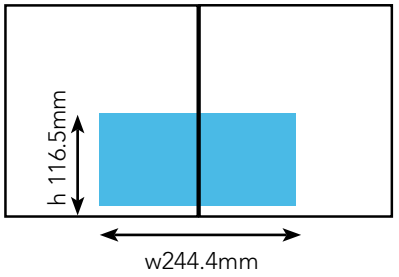

French Fold*

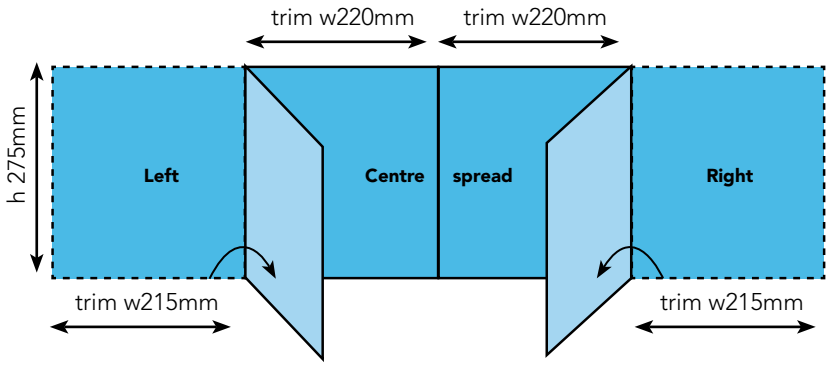

L/H Gate Fold HP Vertical
(include 3mm bleed)

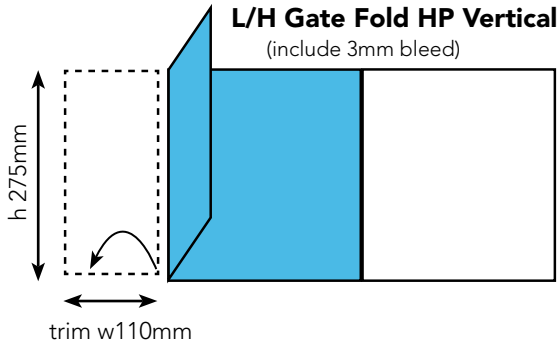

R/H Gate Fold HP Vertical
(include 3mm bleed)

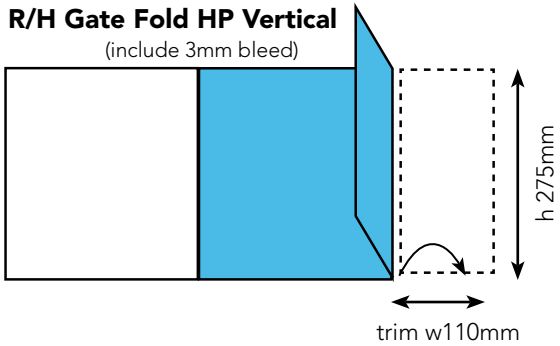

Belly band
overall trim w484mm

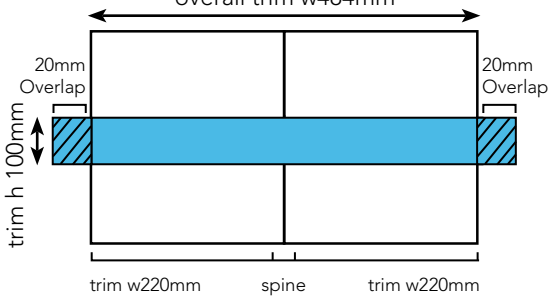

Bookmark** trim w50mm

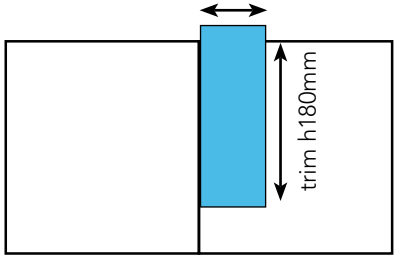

* Full page spreads to be supplied as single page pdfs
and clearly labelled left and right

M&M
NETWORKING GLOBAL MARKETERS

www.mandmglobal.com

Available formats and sizes:

media guide

DPS

overall trim w330mm

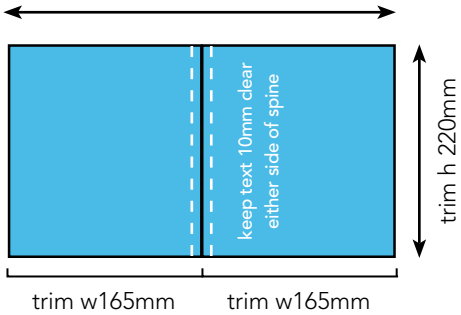

Full Page

trim w165mm

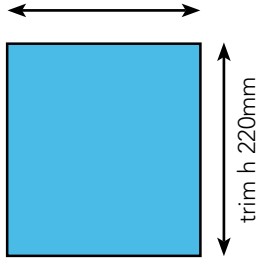

supplements

DPS

Overall trim w380mm

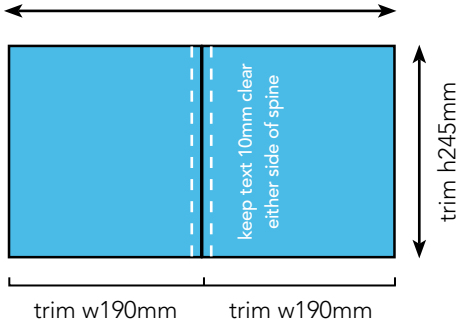

Full Page

trim w190mm

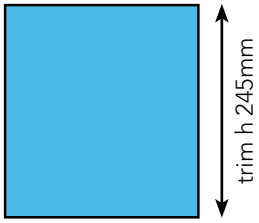

wall charts

trim w880mm

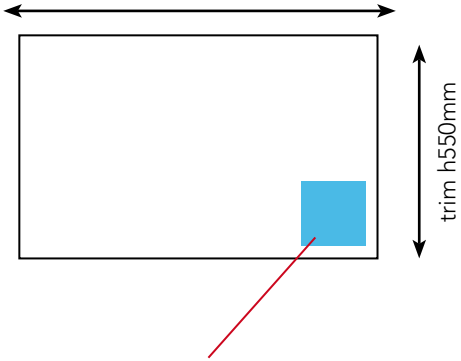

Your Logo Here + 150 words

Logo Requirements
Client Logo must be supplied as an Illustrator

NOTE: Please supply all media guide and supplement artwork as single page pdf's, all to include 3mm bleed and crop marks

Creative delivery specifications

Files submitted to C Squared for inclusion in M&M print products – M&M Magazine, M&M Supplements, M&M Media Guides, must meet the following specifications:

- All logos to be provided as Illustrator EPS'
- All images contained within the PDF must be a minimum of 300dpi, CMYK format. All pantone and RGB colours must be converted to CMYK before creating the PDF as consistent colour versions on the RIPs cannot be guaranteed.
- All files are to be supplied as composite 1.3 CMYK PDFs. A minimum bleed area of 3mm must be contained within the PDF file. Files must contain crop marks and must be saved as single pages.
- No colour management, ICC profiles, Lab colours, screen ruling of dot structure should be embedded within the PDF. All files should only contain Adobe Type 1 fonts and these must be embedded into the PDF.
- No password or security options should be allocated to the Distiller settings. File name should not include any special characters (eg. <>/*\) and should be no longer than 27 characters.
- Please see the latest guidelines for pass4press setting, which can be downloaded at: http://www.pass4press.com/cgi-bin/wms.pl/416
- Naming conventions please label the files clearly using this formula: clientname_issuedate.pdf
- Any press ready PDFs larger than 2MB can be sent via YouSendIt http://dropbox.yousendit.com/csquaredftp
- Send all client artwork to Cynthia Victorello da Costa Oliviera – cynthia@csquared.cc **Tel:** 0207 367 6990

For any further information, please contact:

Cynthia Victorello da Costa Oliveira Sales co-ordinator – cynthia@csquared.cc Tel: 0207 367 6990

Gee Ibrahim, Head of Design & Production – Gee@csquared.cc; **Tel:** 0207 367 6985

Adam Paglia, Senior Designer – design2@csquared.cc; **Tel:** 0207 367 6987

Digital specifications

WEBSITE SIZES

Size (width x height)	Creative	Ideal weight	Max.weight	Tag type	Formats	Animation
728 x 90 pixels	Leaderboard	15-20kb	99kb	javascript	jpg, gif	yes
120 x 600 pixels	Skyscraper	15-20kb	99kb	javascript	jpg, gif	yes
120 x 60 pixels	Button	10kb	99kb	javascript	jpg, gif	yes
300 x 250 pixels	MPU	15-20kb	99kb	javascript	jpg, gif	yes

Notes

Animation can loop indefinitely

- If the banners are white they must have a 1 pixel border all the way round.

M&M SHORTCUT SIZES

Size (width x height)	Creative	Ideal weight	Max.weight	Tag type	Formats	Animation
728 x 90 pixels	Leaderboard	15-20kb	99kb	javascript	jpg, gif	n/a
120 x 600 pixels	Skyscraper	15-20kb	99kb	javascript	jpg, gif	n/a

M&M EZINE

DPS* (include 3mm bleed)
overall trim w440mm

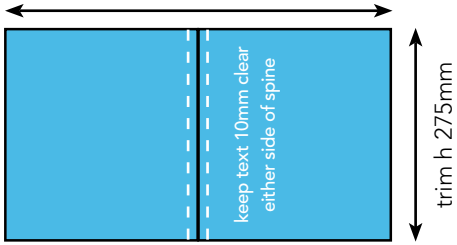
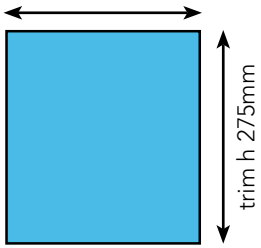
Single (include 3mm bleed)
trim w220mm